REVISIONS				
ZONE	REV	DESCRIPTION	DATE	DRAWN

COMPONENTS			
3	3 PORT BOX - COVER B	ABS UL94V-0	1
2	3 PORT BOX - COVER A	ABS UL94V-0	1
1	3 PORT BOX - BASE	ABS UL94V-0	1
ITEM	PART NAME	DESCRIPTION	Q'TY

PACKAGING:

1pc / Eurolan PE bag
15pcs / Eurolan inner box
Eurolan carton size: 515x394x230(mm)

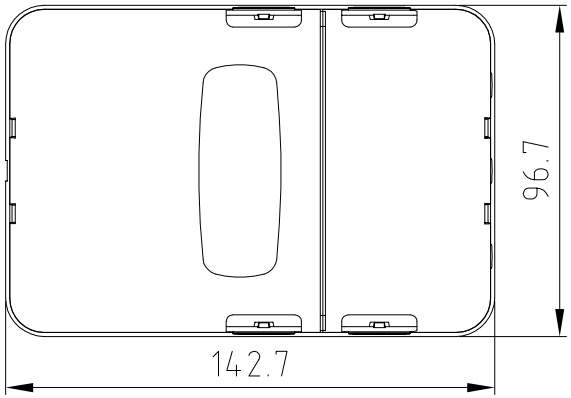

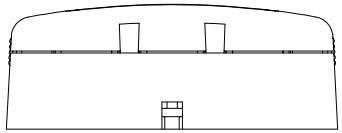

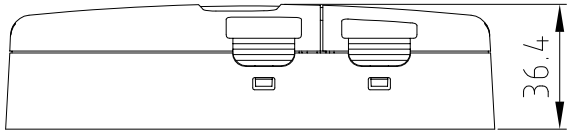

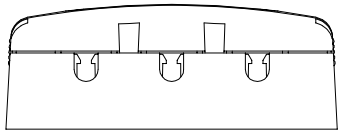

ISOMETRIC VIEW

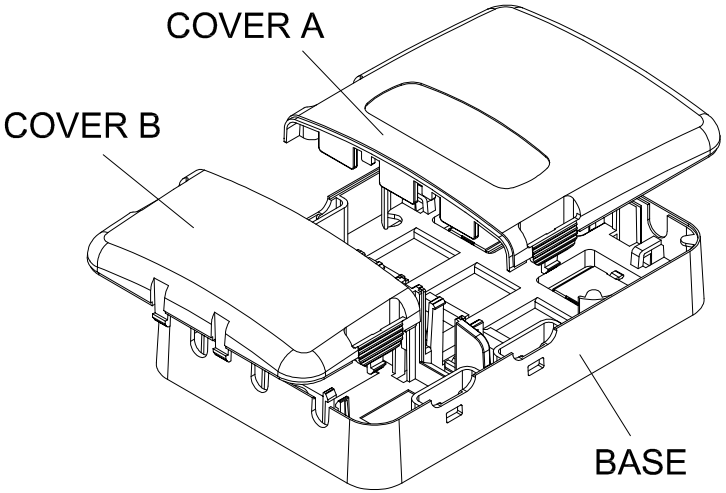

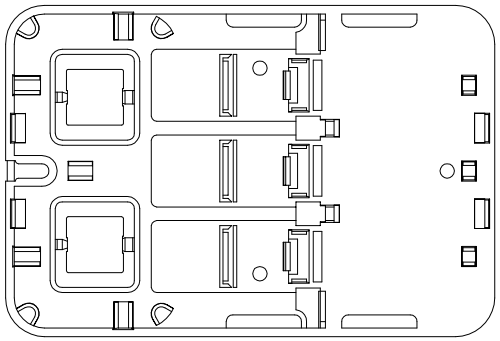

ASSEMBLY DIMENSION

UNLESS OTHERWISE SPECIFIED: TOLERANCES	PROJECT ID 12B-13-33WT	EUROLAN
INCH: .X ± .016, .XX ± .008, .XXX ± .004 / MM: .X ± 0.2, .XX ± 0.1 / ANGULAR: X ± 1°, .X ± .5°	FILE / DATE	TITLE: 3 PORT SURFACE MOUNT BOX
MATERIAL	DRAWN	
SURFACE	CHECK	SIZE / DRAWING NUMBER / PART NUMBER / REV
FINISH	APPROVED	SCALE 1 : 1 / UNIT mm / SHEET